Suction cup connection nipple

SA-NIP N034 G1/4-IG DN550

Part no..:10.01.01.00819

https://www.schmalz.ru/10.01.01.00819

Home > Vacuum Technology for Automation > Vacuum Components > Vacuum Suction Cups > Suction Cups for Plastic Films and Paper > SA-NIP N034 G1/4-IG DN550

Suction cup connection nipple

Thread G1: G1/4"-F
Fitting length: 15 mm
Material: Aluminum

Design Data

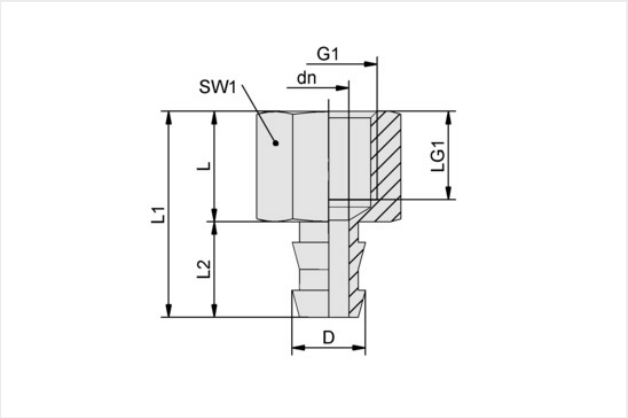

Attribute	Value
dn	5.50 mm
D	12 mm
G1	G1/4"-F
L	15 mm
L1	28 mm
L2	12 mm
LG1	12 mm
SW1	17 mm
SW2	6 mm

Technical Data

Attribute	Value
Nipple family	N 034
Material	Aluminum
Weight	8 g

Contact Schmalz

OOO Schmalz | Mozhayskoe highway 165, bdg1, 121596 Moscow, Russia | +7 495 9671248 | post@ruschmalz.ru